홍콩/싱가포르 국제금융지 현황 및 시사점

The current status of Hong Kong/Singapore as Global Financial Centre

Dec 14th, 2016

MIRAE ASSET
미래에셋대우

Some Questions Raised on Hong Kong’s Future

Is the Hong Kong's position as GFC still Unshakable ?

Hot spots

Ranking of top global financial centres

City	2015	2014
London	**1**	1
New York	**2**	2
Singapore	**3**	4
Hong Kong	**4**	3
Tokyo	**5**	5
Zurich	**6**	7
Washington DC	**7**	10
Shanghai	**16**	21
Shenzhen	**19**	23
Beijing	**23**	29

Source: Z/Xen Group SCMP

STANDARD & POOR'S

AAA

Stable → Negative

(March 31, 2016)

MOODY'S

Aa1

Stable → Negative

(March 12, 2016)

- ❖ Is China's Economy on the way to a Hard Landing?
- ❖ Do Hong Kong's Advantages still Exist?
- ❖ What are the Challenges facing Hong Kong now ?
- ❖ Can Hong Kong still be a major Financial Centre in the World ?

How to be recognized as Global Financial Centre

Major indicators of Competitiveness of GFC peers

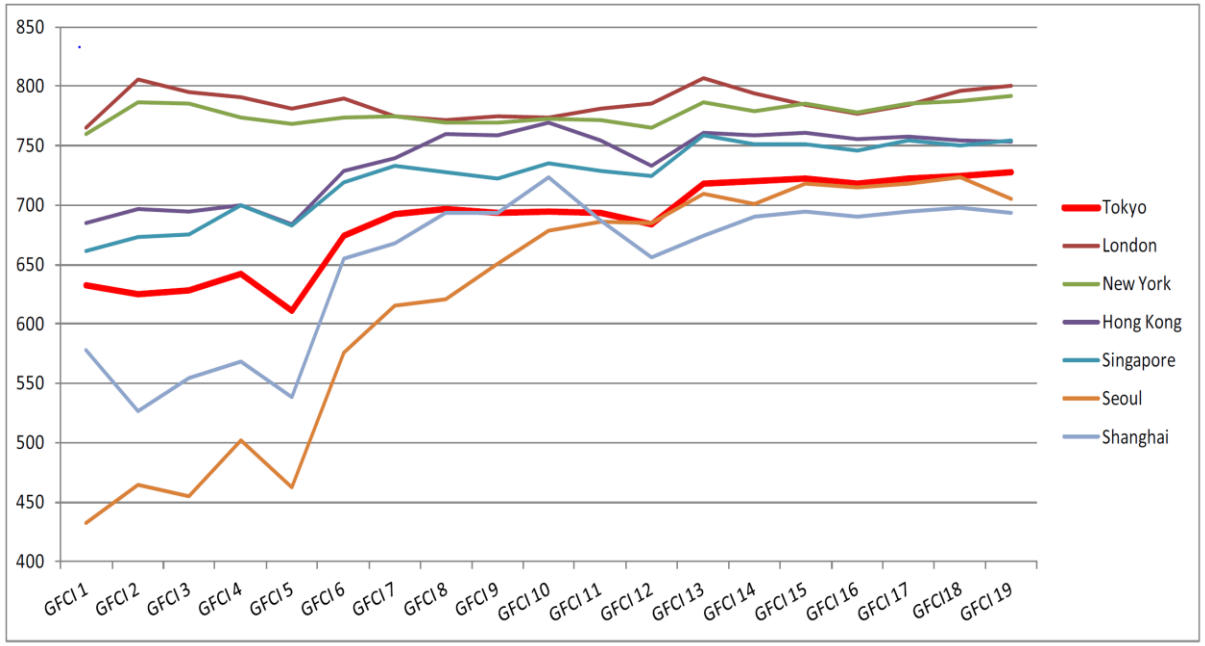

Centre	GFCI19		Business Environment	
	Rank	Rating	Rank	Rating
London	1	800	1	**779**
New York	2	792	2	**770**
Hong Kong	4	753	3	**757**
Singapore	3	755	4	**750**
Tokyo	5	728	7	**710**
Shanghai	16	693	26	**664**
Seoul	12	705	52	**639**

* Z/Yen Group Limited *(Z/Yen Group)*

Centre	GFCI19		Financial Sector Development	
	Rank	Rating	Rank	Rating
London	1	800	1	**779**
New York	2	792	2	**763**
Hong Kong	4	753	3	**733**
Singapore	3	755	4	**729**
Tokyo	5	728	5	**708**
Seoul	12	705	20	**685**
Shanghai	16	693	23	**683**

Centre	GFCI19		Human Capital	
	Rank	Rating	Rank	Rating
London	1	800	1	**781**
New York	2	792	2	**775**
Singapore	3	755	3	**741**
Hong Kong	4	753	4	**740**
Tokyo	5	728	6	**712**
Shanghai	16	693	18	**684**
Seoul	12	705	37	**652**

Centre	GFCI19		Infrastructure	
	Rank	Rating	Rank	Rating
London	1	800	1	**785**
New York	2	792	2	**773**
Hong Kong	4	753	3	**737**
Singapore	3	755	4	**730**
Tokyo	5	728	5	**710**
Seoul	12	705	8	**692**
Shanghai	16	693	11	**683**

Centre	GFCI19		Reputational & General	
	Rank	Rating	Rank	Rating
London	1	800	1	**781**
New York	2	792	2	**771**
Hong Kong	4	753	3	**748**
Singapore	3	755	4	**742**
Tokyo	5	728	12	**697**
Shanghai	16	693	12	**697**
Seoul	12	705	22	**680**

GFCI 20 the Overall Rankings

CITY	GFCI 20 Rank	GFCI 20 Rating	GFCI 19 Rank	GFCI 19 Rating	Change in Rank	Change in Rating
London	1	795	1	800	-	▼ 5
New York	2	794	2	792	-	▲ 2
Singapore	**3**	**752**	**3**	**755**	**-**	▼ **3**
Hong Kong	**4**	**748**	**4**	**753**	**-**	▼ **5**
Tokyo	5	734	5	728	-	▲ 6
San Francisco	6	720	8	711	▲ 2	▲ 9
Boston	7	719	9	709	▲ 2	▲ 10
Chicago	8	718	11	706	▲ 3	▲ 12
Zurich	9	716	6	714	▼ 3	▲ 2
Washington DC	10	713	7	712	▼ 3	▲ 1
Seoul	**14**	**704**	**12**	**705**	**2**	**1**
Shanghai	**16**	**700**	**16**	**693**	**-**	**7**
Osaka	17	699	20	687	3	12
Taipei	21	692	24	677	▼ 3	▼ 15
Shenzhen	**22**	**691**	**19**	**688**	**3**	**3**
Beijing	**26**	**683**	**23**	**682**	**3**	▲ **1**
Busan	**41**	**640**	**38**	**644**	**3**	**4**

* Z/Yen Group Limited *(Z/Yen Group, September 2016)*

Hong Kong’s Status as Global Financial Centre

Major Economic Indicators of Hong Kong

	2013	2014	2015	Forecast/Latest
Population, Mid-year (million)	7.19	7.24	7.31	7.35[a]
Gross Domestic Product (US$billion)	274.1	289.5	307.3	315.0-318.1[b]
GDP Per Capita (US$)	38,100	40,000	42,100	42,200-42,600[b]
Real GDP Growth (%)	+3.1	+2.7	+2.4	+1.5[b]
Inflation (% Change in Composite CPI)	+4.3	+4.4	+3.0	+2.7[c]
Unemployment Rate (%)	3.4	3.3	3.3	3.4[d]
Retail Sales Growth (%)	+11.0	-0.2	-3.7	-9.6[e]
Visitor Arrival Growth (%)	+11.7	+12.0	-3.9	-6.1[e]

[a] 2016; [b] government forecast for 2016; [c] year-on-year change in January-October 2016; [d] seasonally adjusted, August-October 2016. [e] year-on-year change in January-September 2016.

The Unique Advantages of Hong Kong

Gateway b/w China& the World

- HK has deep and extensive connections with the Mainland China with preferential opportunities
- Long history of serving the financial needs of Mainland China
- The world first and largest off-shore RMB business hub
- Mainland's Off-shore Equity funding centre

HONG KONG'S POSITION as GFC

Unique Competitiveness

- Business environment is world-class
- HK's markets are international
- The regulatory regime is strongly accepted and recognized in the world.
- Rich pool of professional talent
- Efficient Infrastructures
- Free flow of financial and human capital

Offshore RMB Centre | **Leading Asset Mgt Centre** | **ETF market Leader** | **Global Equity Funding Leader** | **Vibrant Bonds Market**

Parallel growth with Mainland China

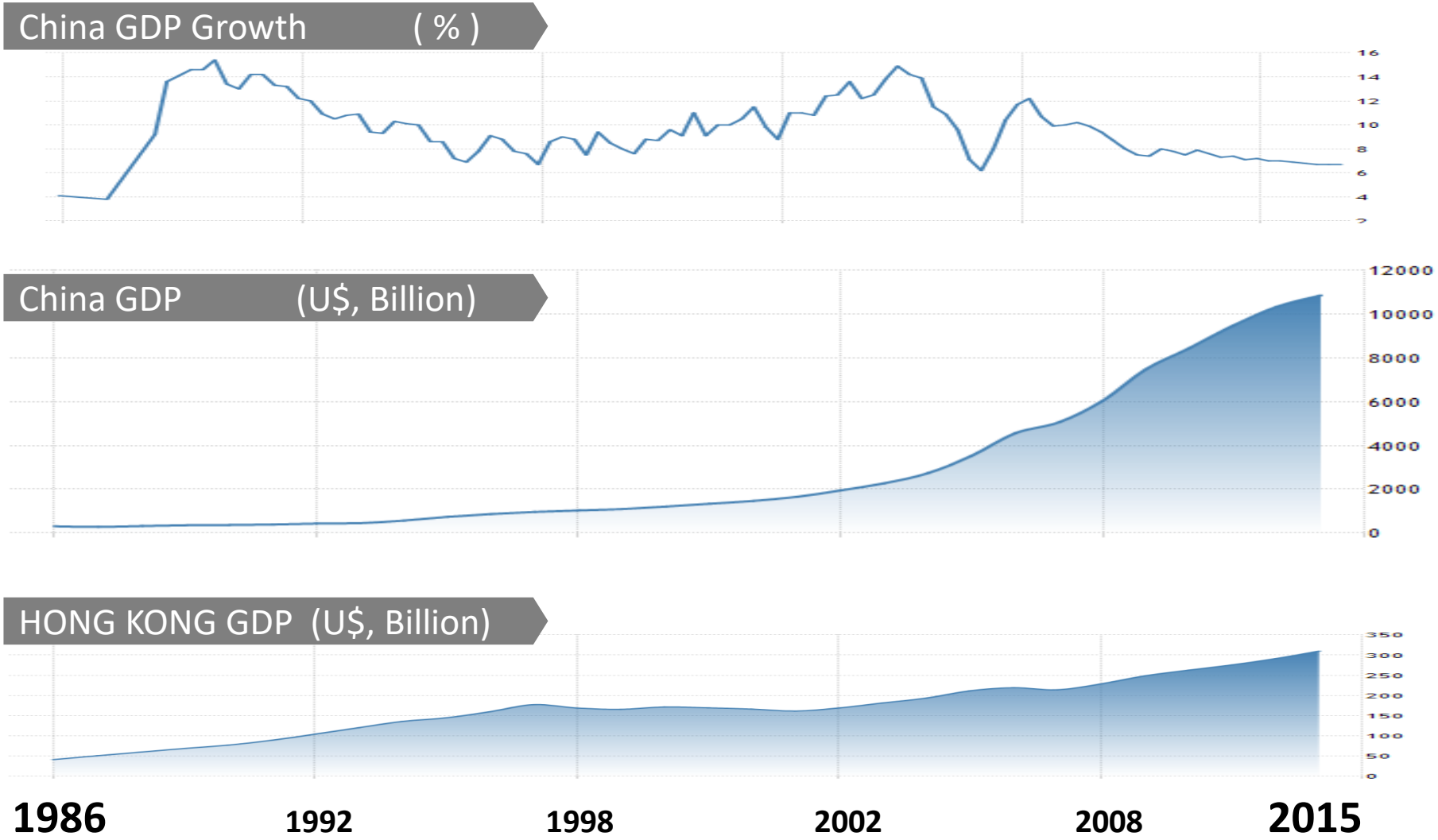

7 X

35 X

Hong Kong's Roles in China's Economy in the past

Transit Trade Centre	FDI Gateway	Capital Market
• Let China become the world's largest exporter and the 2nd largest importer in the world.	• Convey Investment Flows both ways • Let China become the Factory of the world	• Tons of Chinese companies raised money from HK • Offshore Capital supply hub to China's Economy
Diminished	Diminished	To be enhanced

How is the function of the GFC is Running?

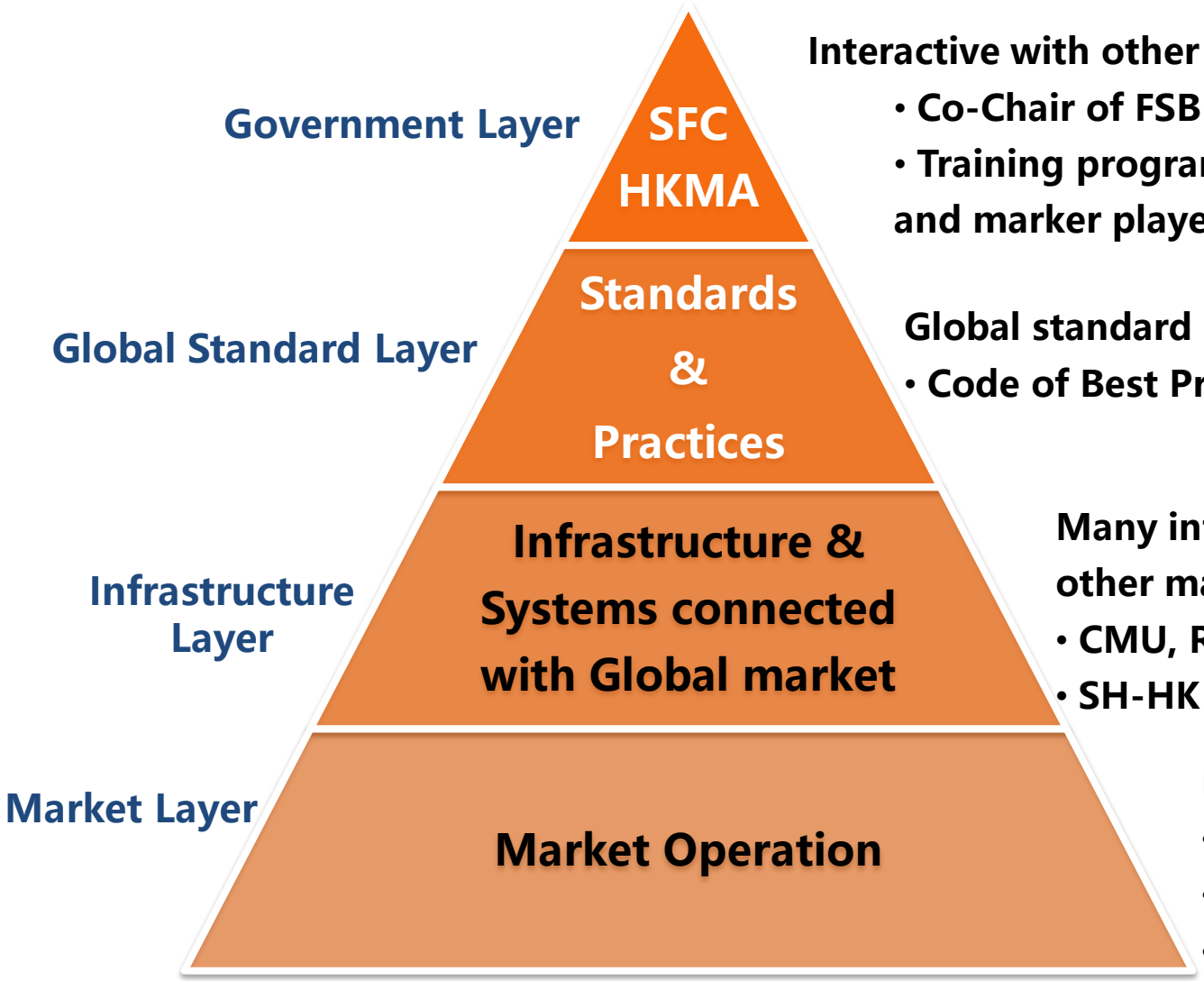

Interactive with other Supervisors as Global Leader

- **Co-Chair of FSB in Pan-Asia**
- **Training programs for the financial supervisors and marker players from other places**

Global standard rules maker and provider

- **Code of Best Practices and Global Principles**

Many infrastructures connecting with other markets, products, currencies.

- **CMU, RTGS**
- **SH-HK Stock connect, SZ-HK Connect**

HKMA, MPFA, SFC, OCI

- **Regulating and Monitoring**
- **License, Tax& Policies**
- **Talents Pool and labor market**

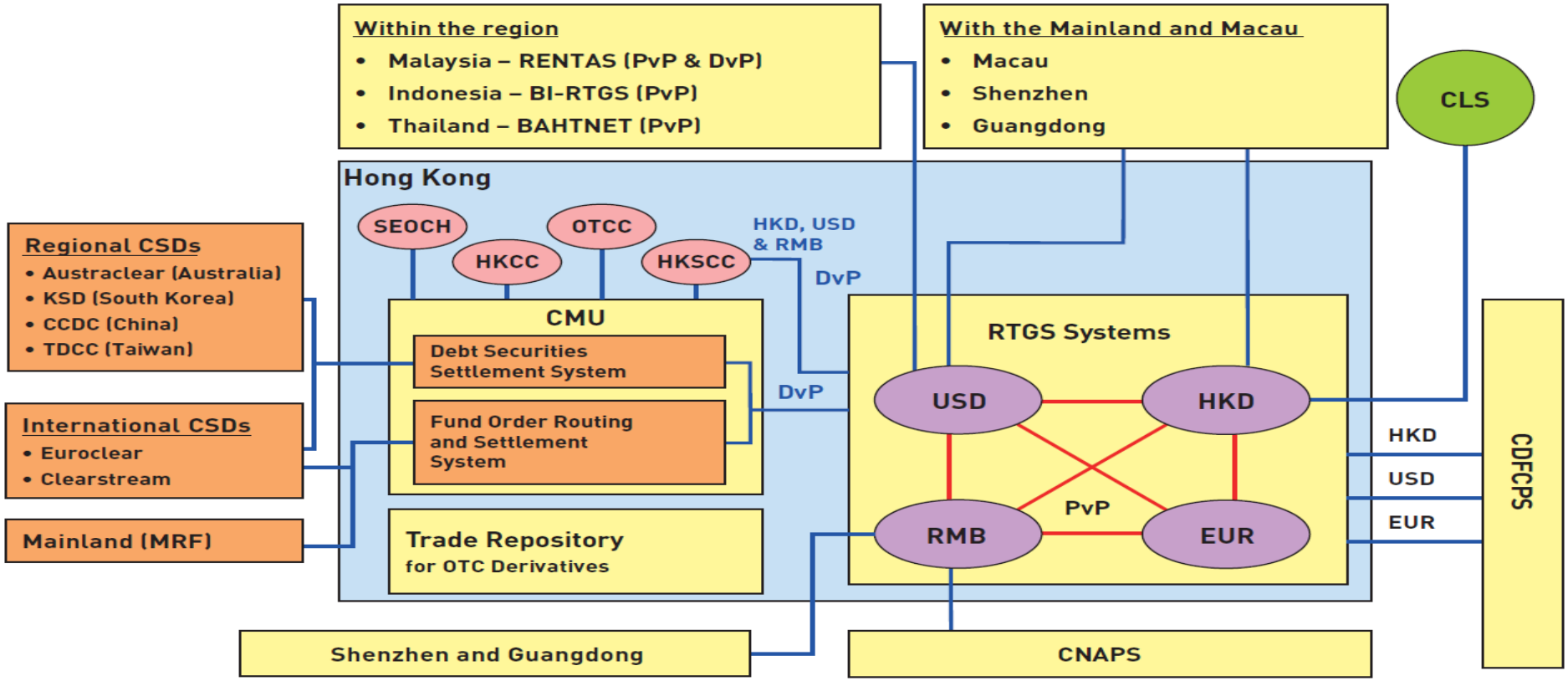

BAHTNET - Bank of Thailand Real Time Gross Settlement (Thailand's baht RTGS system)
BI-RTGS – Bank Indonesia Real Time Gross Settlement (Indonesia's rupiah RTGS system)
CCDC – China Central Depository & Clearing Co., Ltd. (settlement system for fixed income securities in China)
CDFCPS – China's Domestic Foreign Currency Payment System (RTGS system for foreign currency payment in China)
CLS – Continuous Linked Settlement (global multi-currency cash settlement system)
CMU – Central Moneymarkets Unit (settlement system for debt securities)
CNAPS – China National Advanced Payment System (RMB RTGS system in China)
HKCC – HKFE Clearing Corp Ltd (central counterparty providing clearing and settlement for futures)
HKSCC – HK Securities Clearing and Co Ltd (operator of the clearing and settlement system for shares)
KSD – Korean Securities Depository (Korea's central securities depository)
MRF – Mutual Recognition of Funds
OTCC – OTC Clearing Hong Kong Limited (central counterparty providing clearing and settlement for OTC derivatives)
RENTAS – Real Time Electronic Transfer of Funds and Securities (Malaysia's ringgit RTGS system)
SEOCH – SEHK Options Clearing House Ltd (central counterparty providing clearing and settlement for options)
TDCC – Taiwan Depository and Clearing Corporation (Taiwan's securities settlement system)

DvP – Delivery-versus-Payment
PvP – Payment-versus-Payment

* *Source: www.hkma.gov.hk*

Leading the pack

Performance for the first nine months of 2016

Rank	Stock exchange	Proceeds from initial public offerings (US$b)	Market share (%)	Number of issues
1	Hong Kong	**16.92**	22.1	40
2	Shanghai	**8.22**	10.7	58
3	New York	**7.09**	9.3	22
4	Nasdaq	**4.09**	5.3	46
5	OMX Copenhagen	**3.53**	4.6	2
6	Australia	**3.1**	4.1	36
7	Euronext Amsterdam	**2.75**	3.6	4
8	London	**2.72**	3.6	9
9	Shenzhen ChiNext	**2.45**	3.2	48
10	Tokyo	**2.18**	2.9	7

Equity raisings for Jan-Sep in Hong Kong

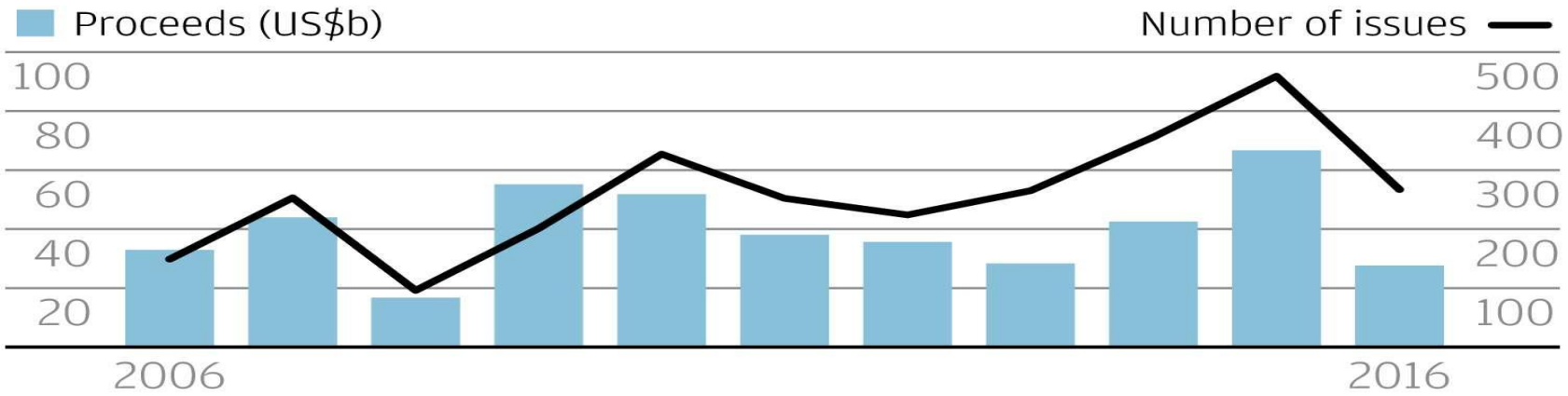

Source: Thomson Reuters

SCMP

What are the Challenges facing Hong Kong ?

The Challenges facing Hong Kong as a leading GFC

❖ The current economic, social and political factors are still affecting Hong Kong.

❖ China is moving to a next level of integration with the world. China plugs itself directly into the global economy. And Chinese global businesses may bypass Hong Kong.

❖ Hong Kong is heavily dependent on China's economy. Instead, Mainland financial centers, like Shanghai and Shenzhen, become more accessible internationally .

❖ Hong Kong will keep competing with current and new rivals, like Singapore, Tokyo, Seoul and Busan.

What are the Strategies and Initiatives ?

The next Positions Hong Kong can take for China

China's Global Wealth Management Centre

- High net worth individuals have begun invest abroad directly
- Shanghai-HK Stock Connect and Shenzhen – HK Connect launched.
- "China money" become a driving force to enter global asset market through HK's platform

The Top Offshore Risk Management Centre

- Interest rate and Exchange rate are still under-control in China
- Derivatives markets are not mature in China.
- International investors can hedge and manage China risk in Hong Kong

China's Global Asset Pricing Centre

- Mainland investors enter all kinds of Global markets robustly
- More international equities and commodities become priced in RMB
- Chinese bargain power become enhanced
- Hong Kong is "Home" for Mainland investors but also trusted by international investors.

Key Strategies of Hong Kong for Next Positions

Offshore RMB Business Hub

- The world's largest offshore pool of RMB Liquidity
- Development of RMB bonds, loans, equity products
- Platform of RMB internationalization

"Super-connector" One Belt One Road

- China's One Belt One Road Initiative
- AIIB established in 2015
- The role of Treasury Centre for AIIB
- CEPA agreement with Mainland China

GLOBAL OPPORTUNITIES + CHINA OPPORTUNITIES

= HONG KONG ADVANTAGES

Singapore Vs. Hong Kong

on the One Way Rivalry to be Top 3

SINGAPORE

HONG KONG

ASEAN Member	S.A.R of China
▪ Competitive business environment with advanced financial sector, infrastructure, labor force. ▪ Low tax environment with strong IP protection, contract enforcement, dispute resolution. ▪ One British colonies with familiar legal& regulation system and accepted by Western investors	
▪ As member of ASEAN, Singapore benefits from preferential policies in this market. ▪ Diversified economy with its success in medical tourism, integrated resorts, biotechnology.	▪ Testing ground for China's financial reforms (Off-shore RMB business etc.) ▪ Given China's status of the world 2nd largest country, Hong Kong has exclusive or preferential business opportunities.
▪ The level of development of ASEAN members vary widely with relatively small scale and some members suffer political volatility.	▪ Mainland China has been gradually developing, HK may lose its unique status within China. ▪ Hong Kong is highly depended on Banking and Property sector and China economy.

VS

Some Implications

What are the Key Words for being a GFC?

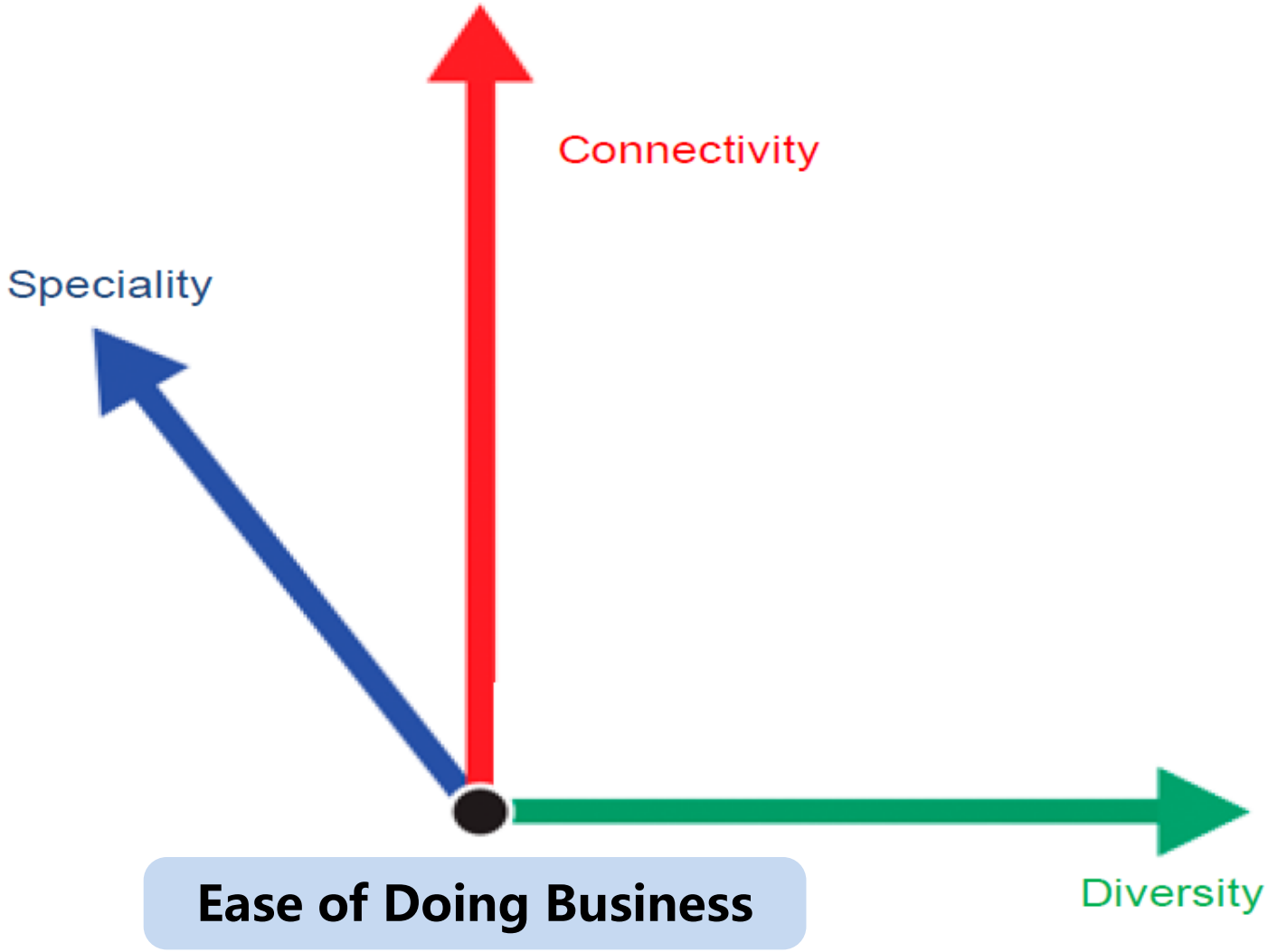

What are basic Questions for doable Solutions?

Regional Financial Centre or Global Financial Centre ?

What is the given fundamental as a base to build a Financial Centre ?

Do you have any priorities to delegate a huge economy zone?

How to connect the various markets and players regardless their territory ?

How Copying promotes Innovation and Creativity ?

Thank You!

MATT JIN/김명철 이사

mattjin97@gmail.com

DAEWOO SECURITIES (HONG KONG)

MIRAE ASSET
미래에셋대우